VINSTRA

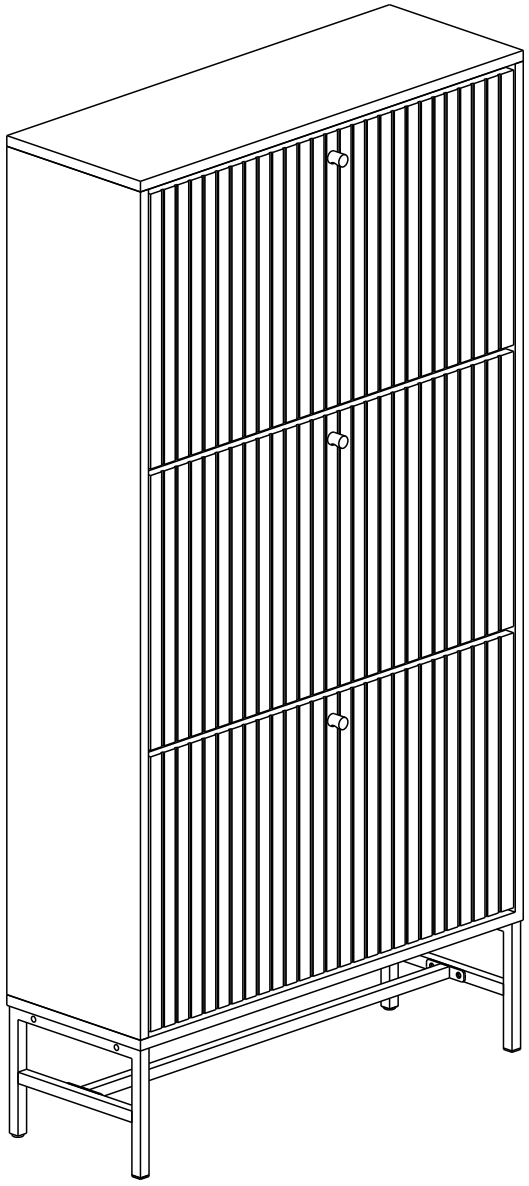

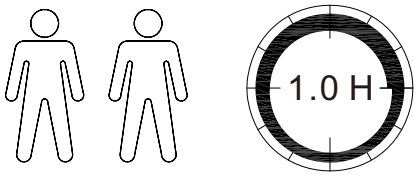

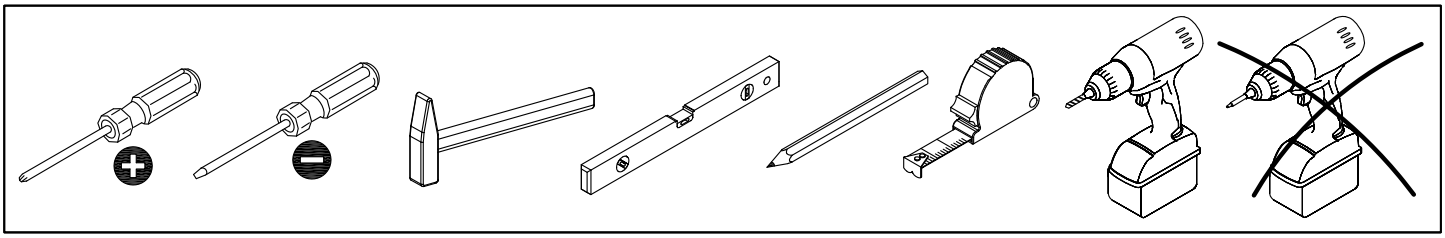

11/04/2024

			√
①	1	716x250x15mm	
②	1	1194x250x15mm	
③	1	1194x250x15mm	
④	1	716x250x15mm	
⑤	1	1194x80x15mm	
⑥	1	1204x312x4mm	
⑦	1	1204x312x4mm	
⑧	1	180x245x16mm	
⑨	1	180x245x16mm	

			√
⑩	2	679x16x16mm	
⑪	1	679x70x16mm	
⑫	3	678x387x16mm	
⑬	3	296x200x23mm	
⑭	3	296x200x23mm	
⑮	6	674x144x12mm	
⑯	3	674x96x12mm	
⑰	1	685x78x15mm	

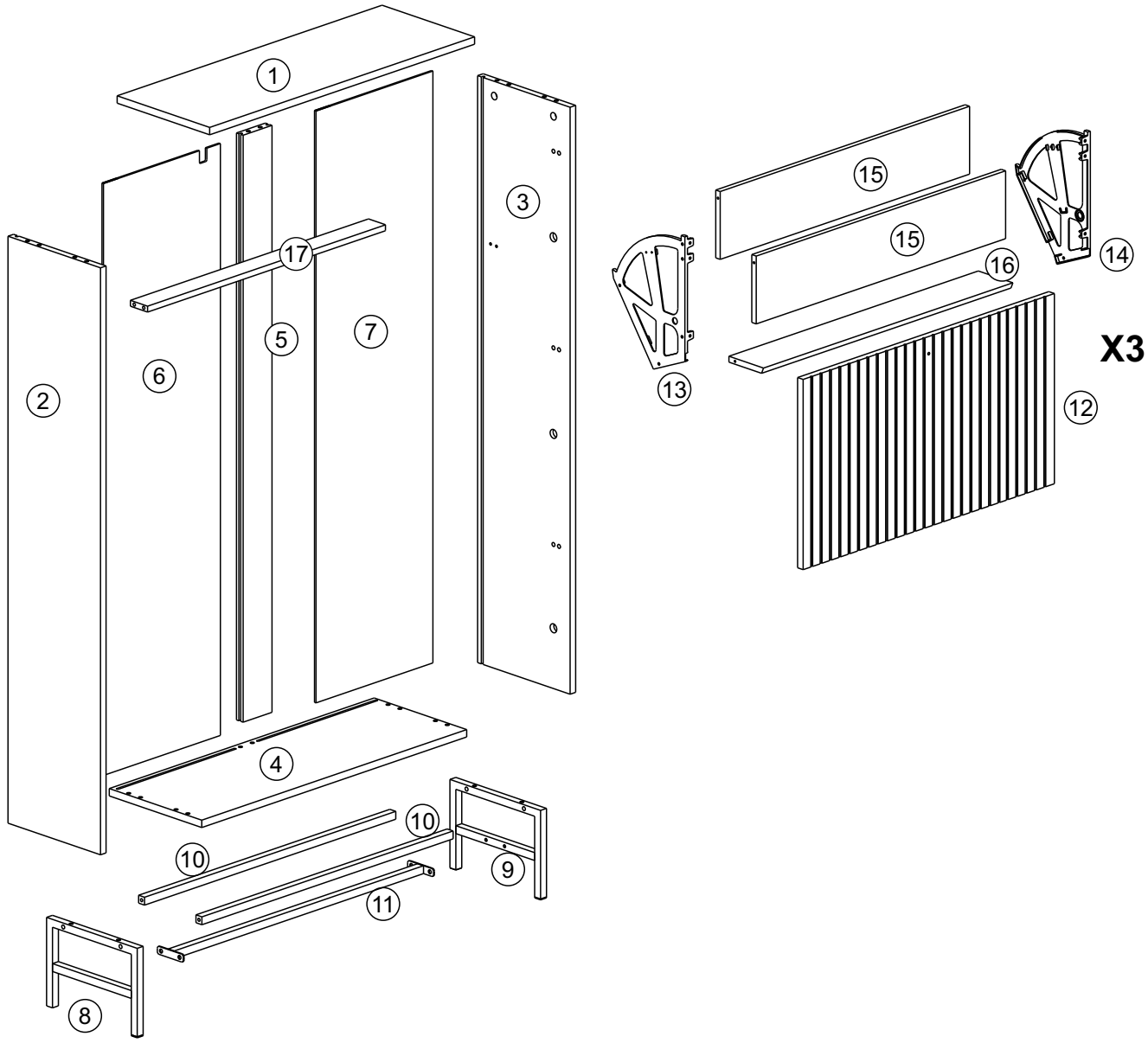

A x 6 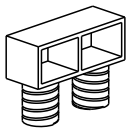 25x16x8 mm	B x 6  Ø23x10 mm	C x 6  Ø17x12 mm	D x 6  Ø4x14 mm	E x 36 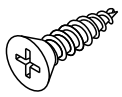 Ø4x16 mm
F x 10 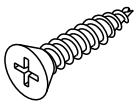 Ø3.5x20 mm	G x 6 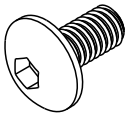 M6x12 mm	H x 4 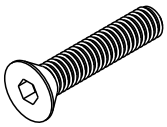 M6x28 mm	J x 4 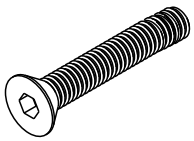 M6x40 mm	K x 3 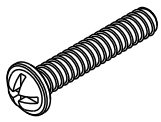 M6x20 mm
L x 6 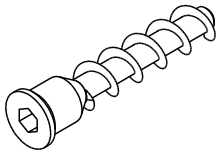 Ø5x38 mm	M x 10 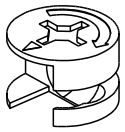 Ø15x12 mm	N x 3 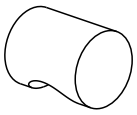 Ø17x22 mm	P x 2 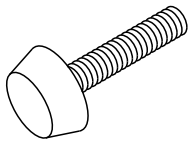 Ø13.5x25 mm	Q x 10 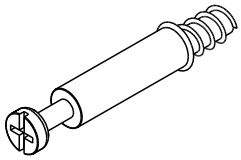 Ø6x45 mm
R x 10 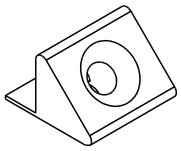 15x13x10 mm	S x 8 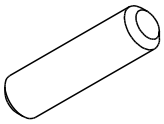 Ø8x30 mm	T x 1 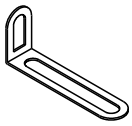 75x25x15 mm	U x 1 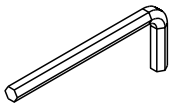 3 mm	V x 1 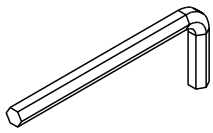 4 mm

1

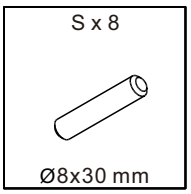
S x 8
Ø8x30 mm

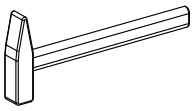

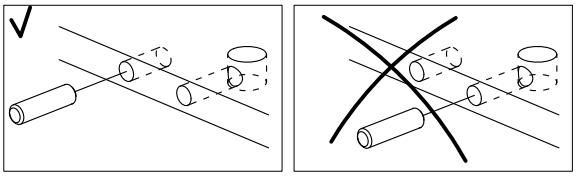

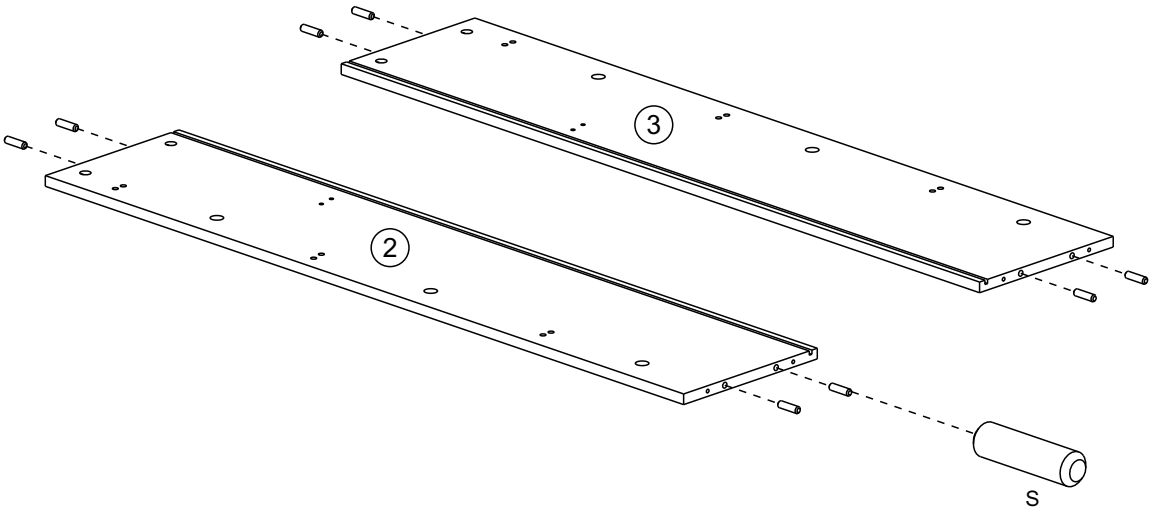
3
2
S

2

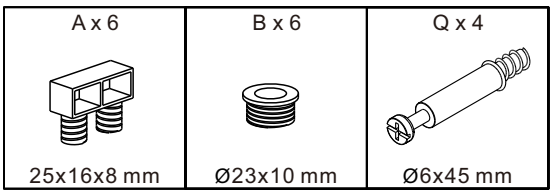
A x 6
B x 6
Q x 4
25x16x8 mm
Ø23x10 mm
Ø6x45 mm

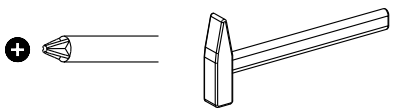

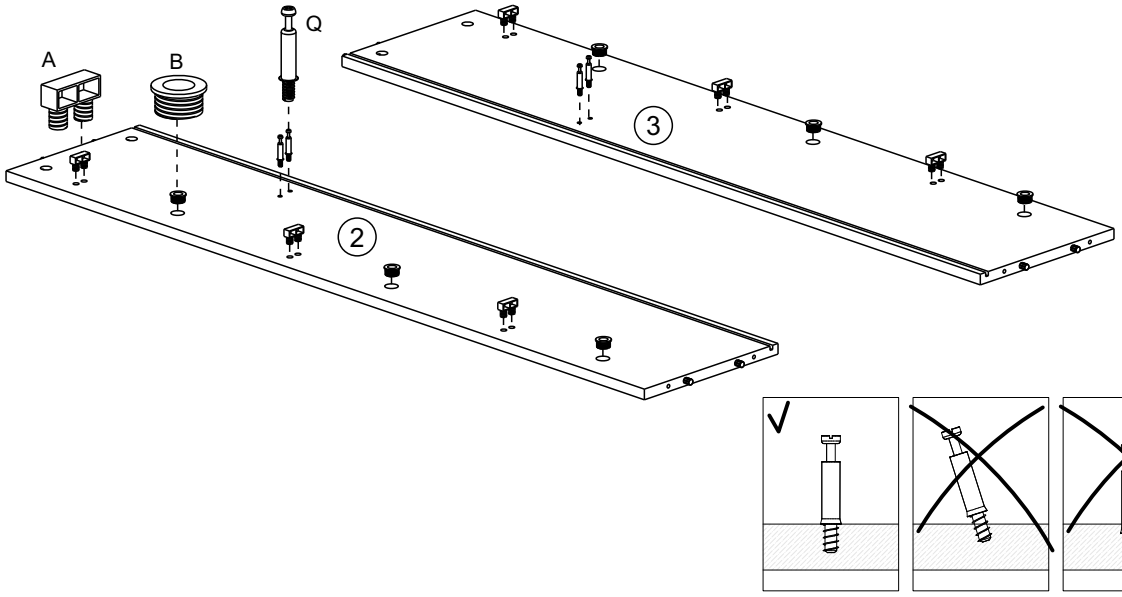
A
B
Q
3
2

3

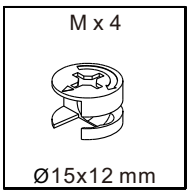
M x 4
Ø15x12 mm

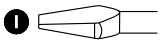

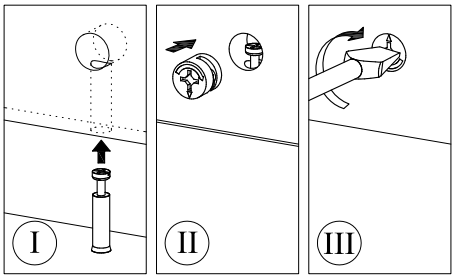
I
II
III

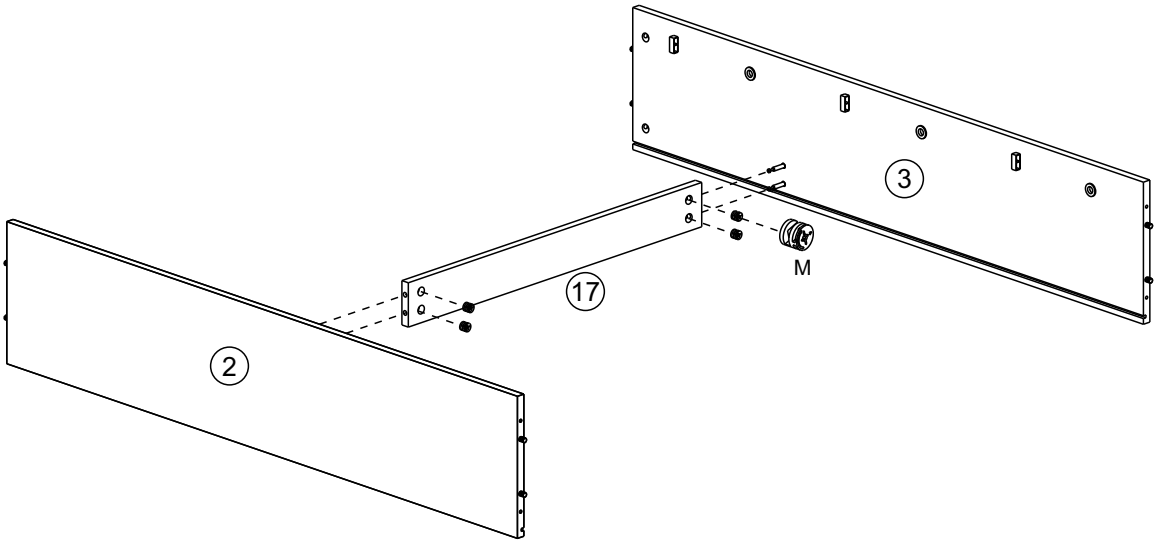
3
M
17
2

4

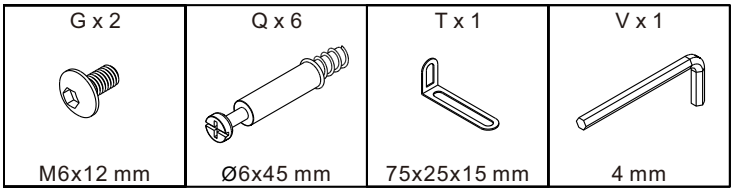
G x 2
M6x12 mm
Q x 6
Ø6x45 mm
T x 1
75x25x15 mm
V x 1
4 mm

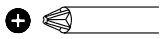

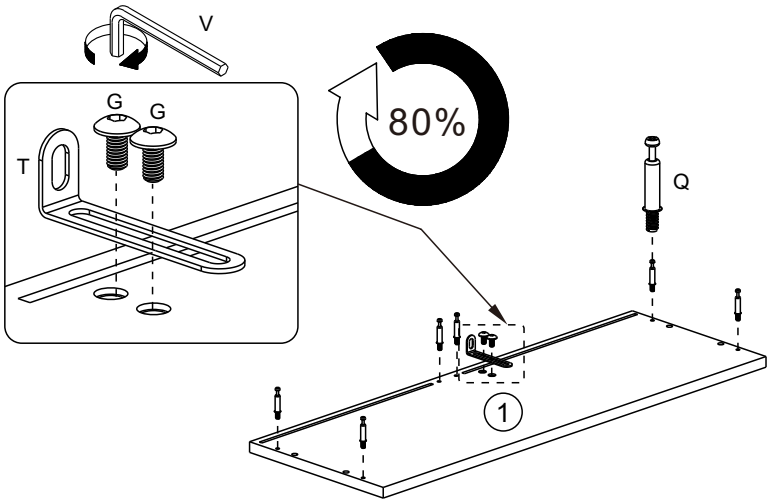
V
G
G
T
80%
Q
1

5

M x 2



Ø15x12 mm

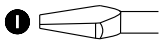

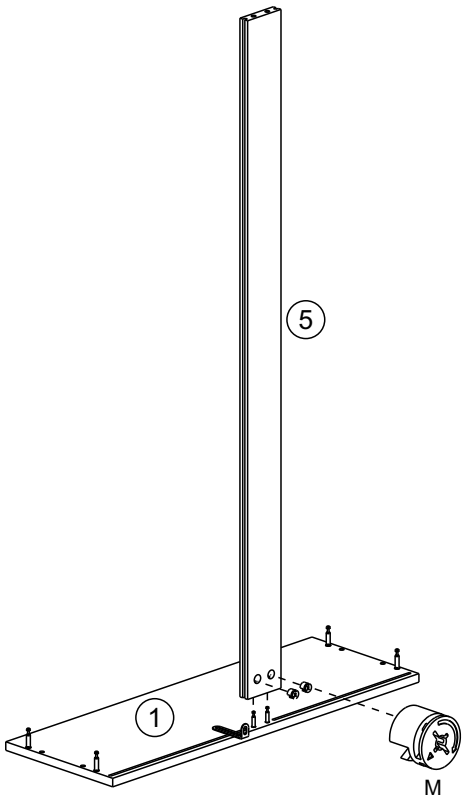

6

M x 4



Ø15x12 mm

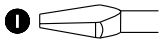

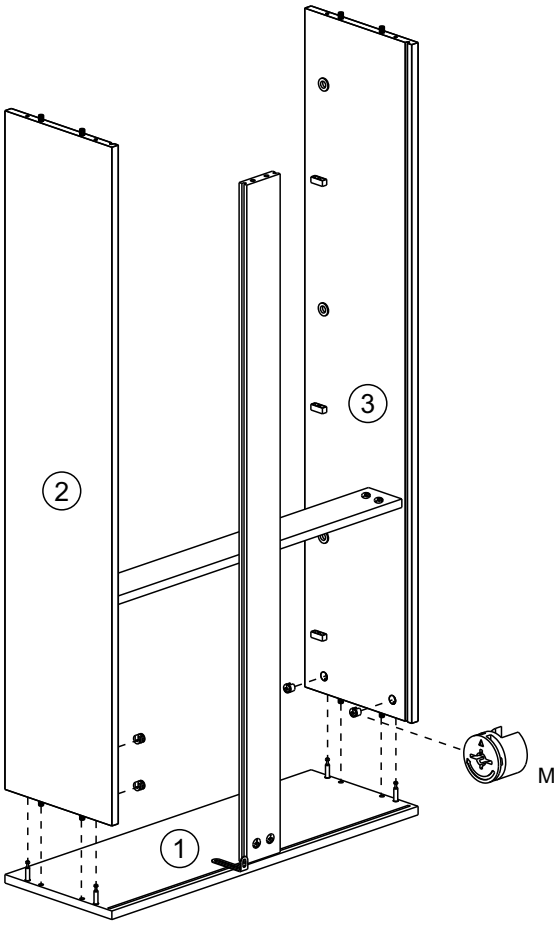

7

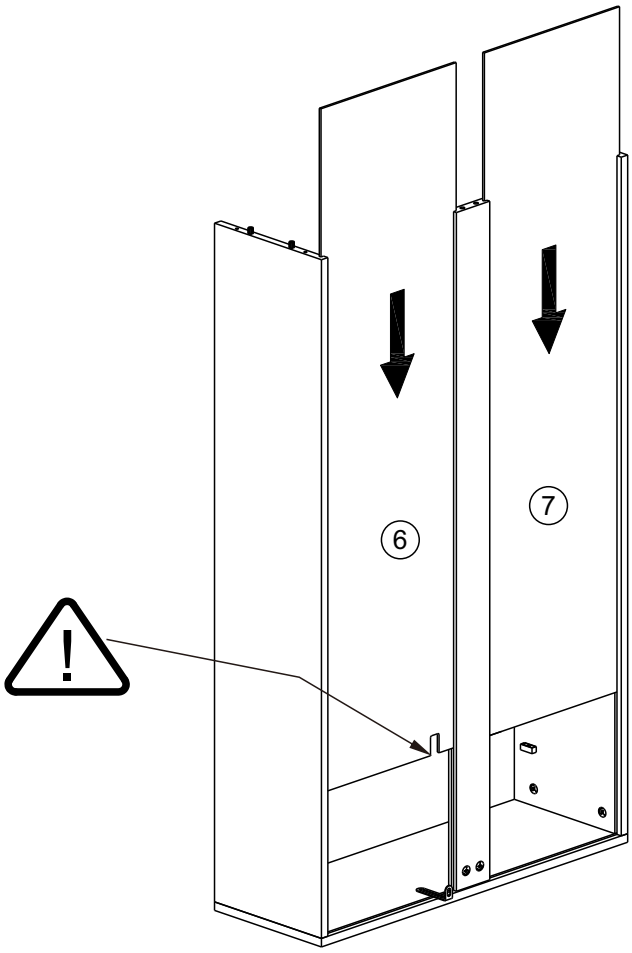

8

L x 6	U x 1
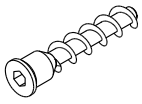	
Ø5x38 mm	3 mm

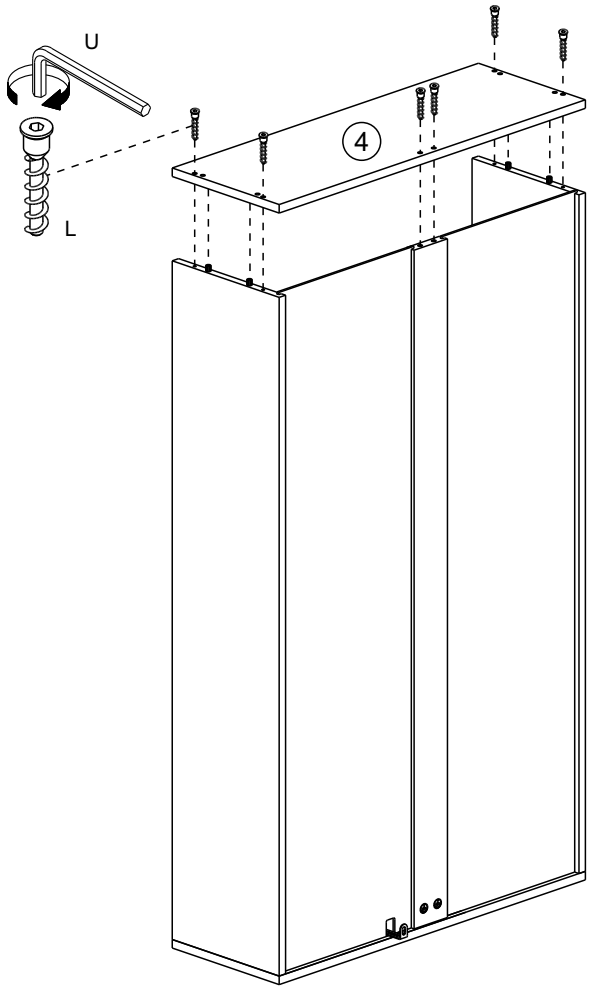

9

P x 2
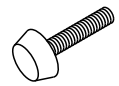
Ø13.5x25 mm

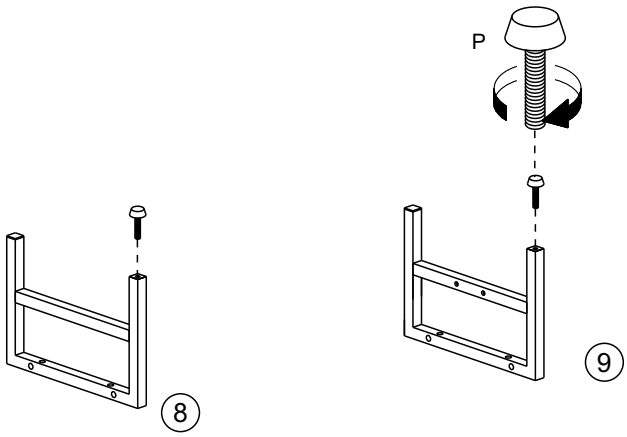

10

G x 4	H x 4	V x 1
	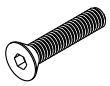	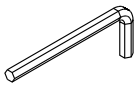
M6x12 mm	M6x40 mm	4 mm

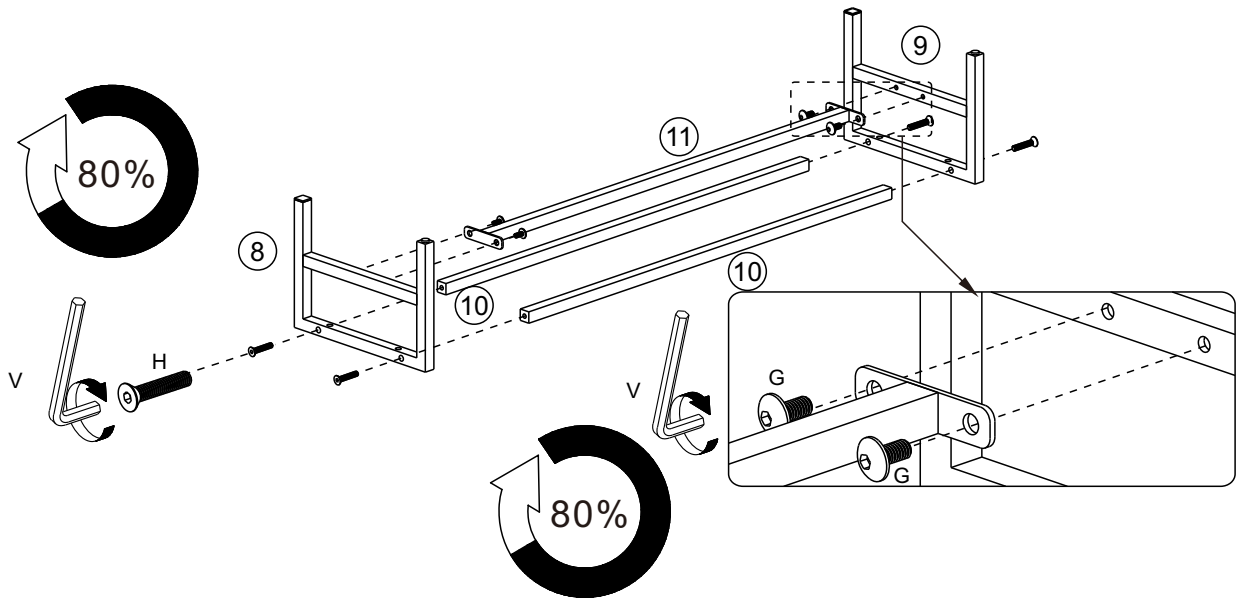

11

H x 4	V x 1
M6x28 mm	4 mm

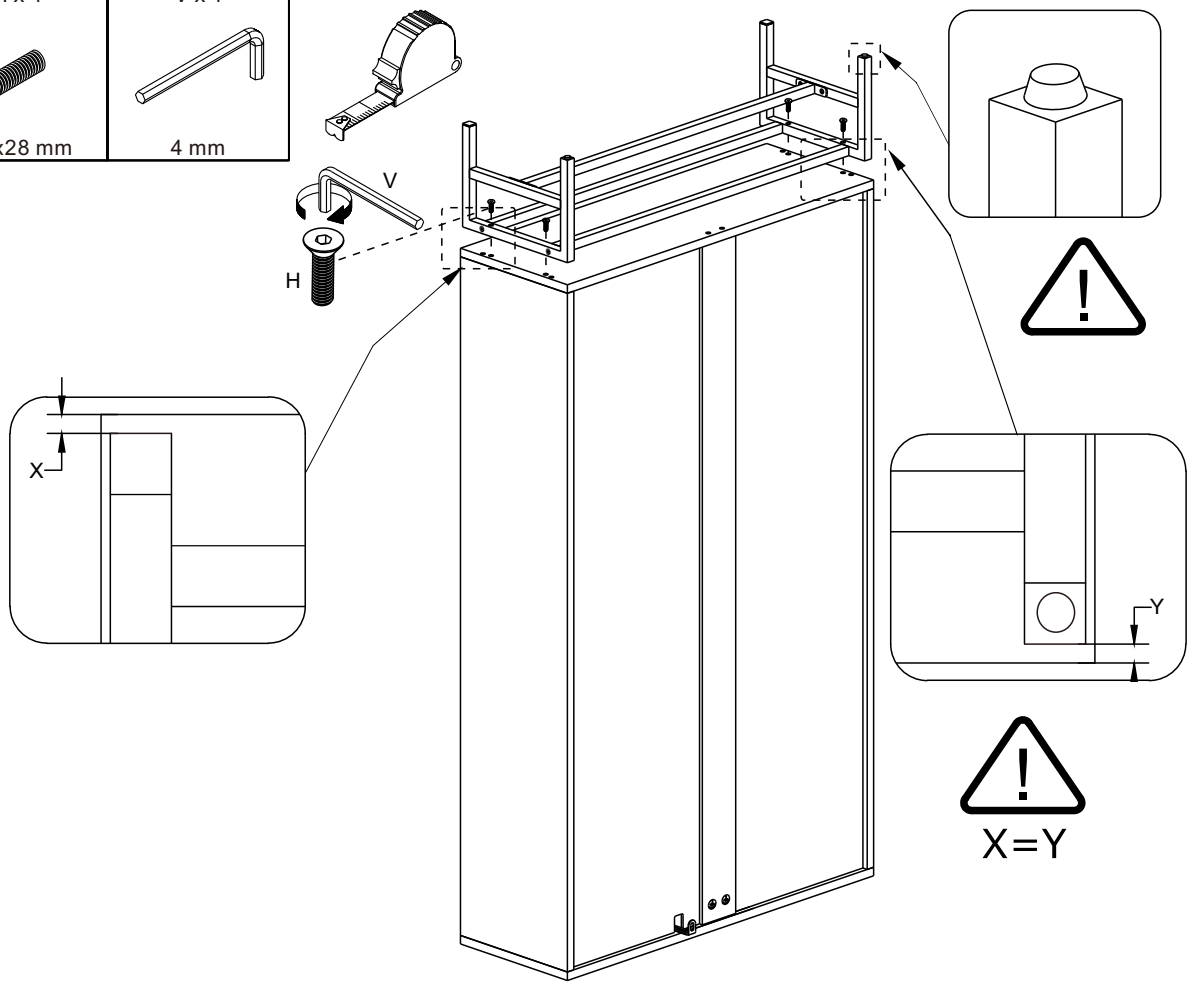

12

V x 1
4 mm

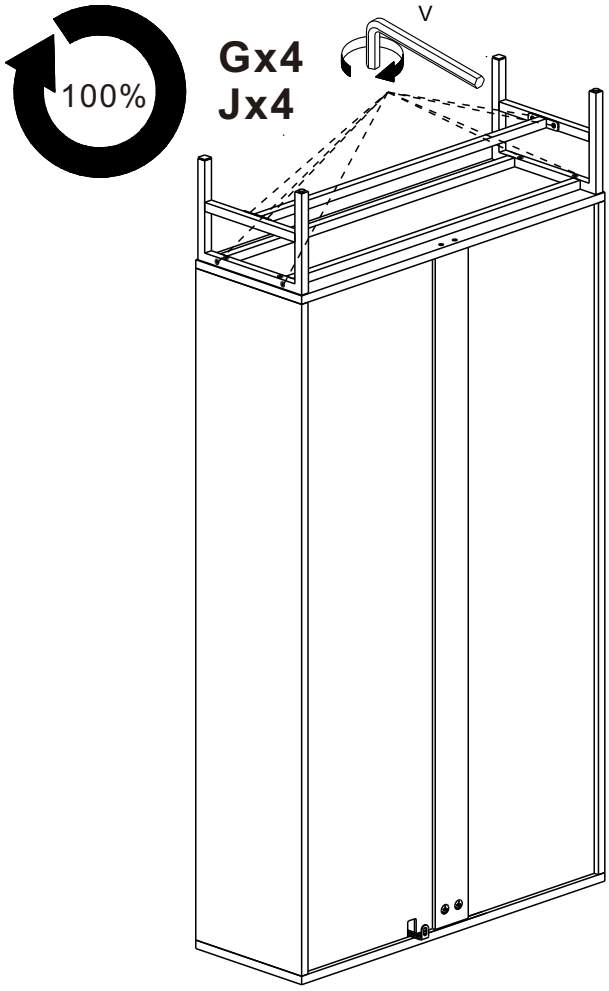

13

F x 10	R x 10
Ø3.5x20 mm	15x13x10 mm

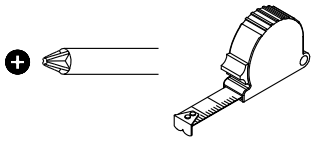

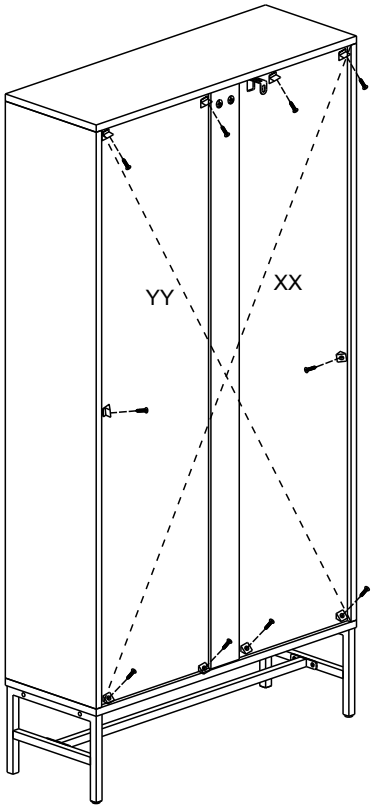

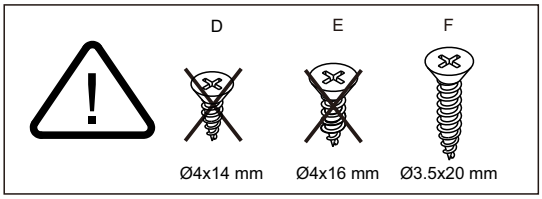

XX=YY

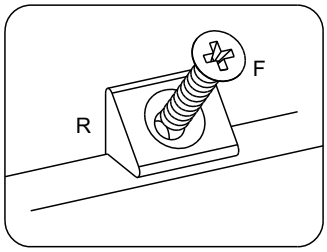

14

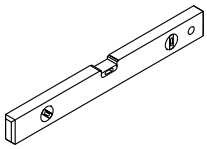

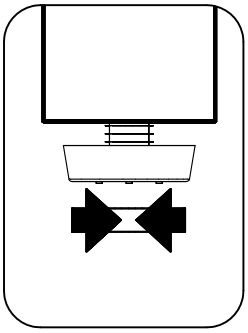

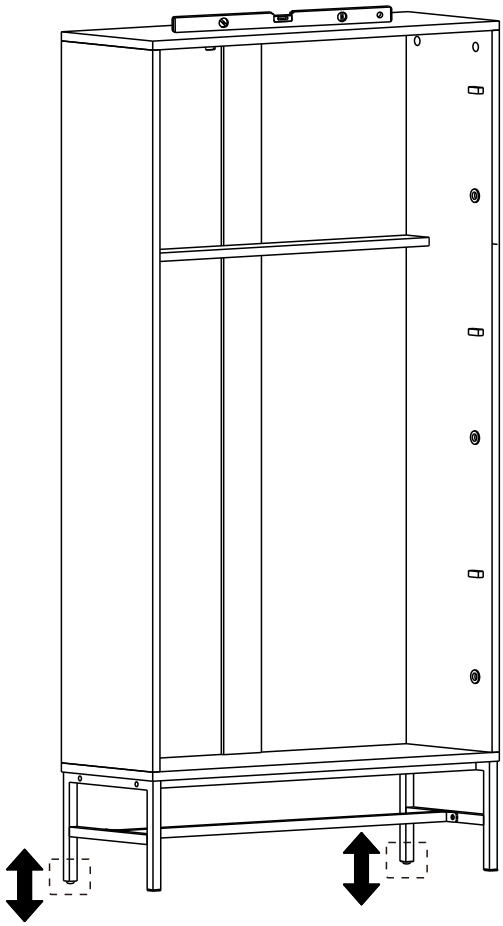

15

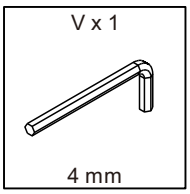

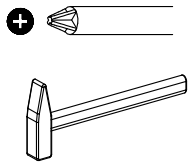

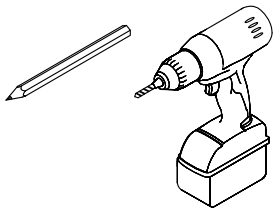

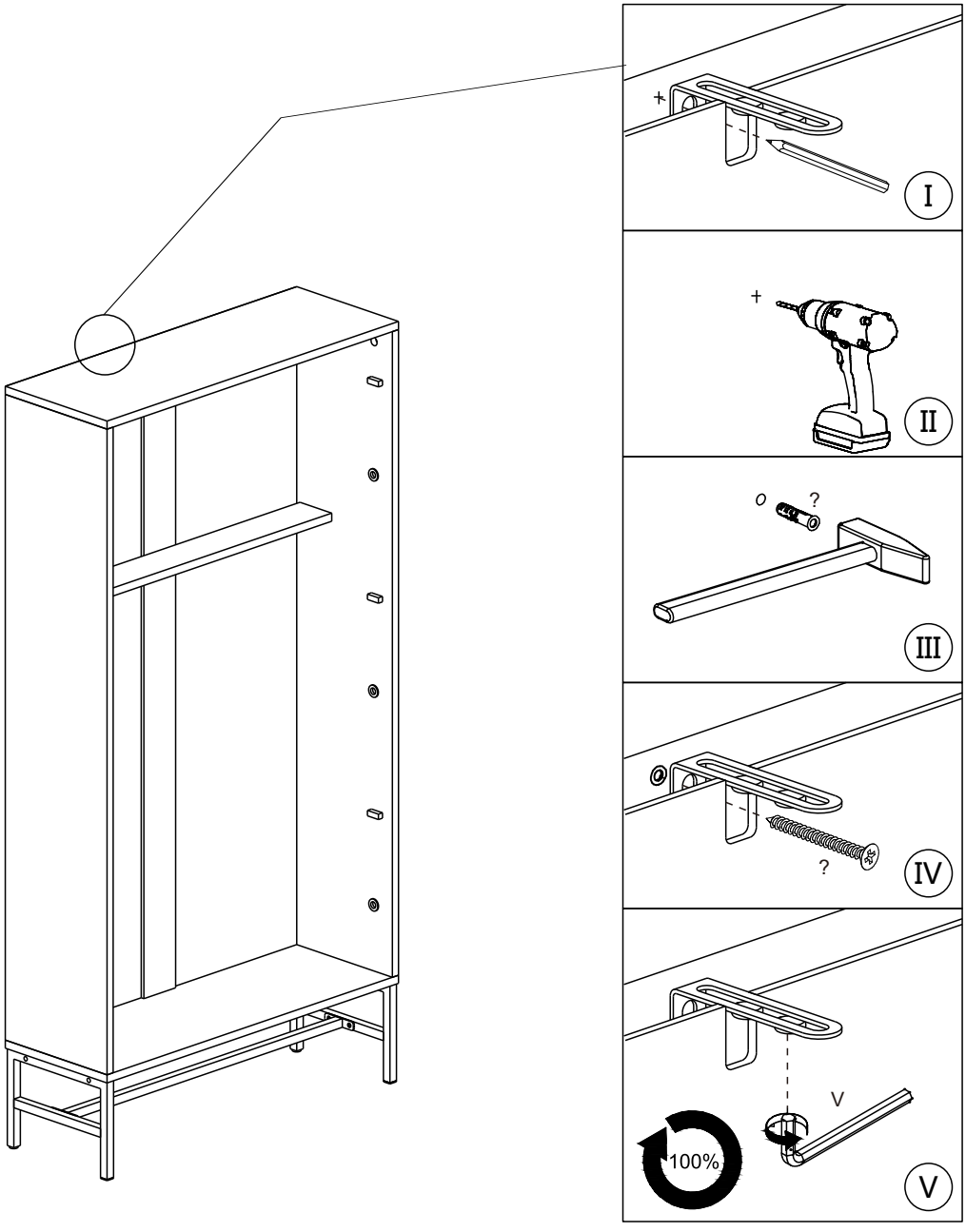

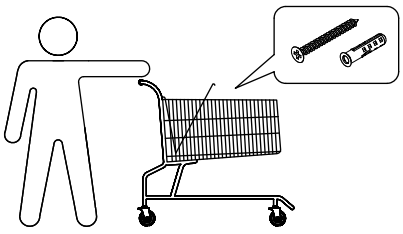

16

E x 6



Ø4x16 mm

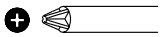

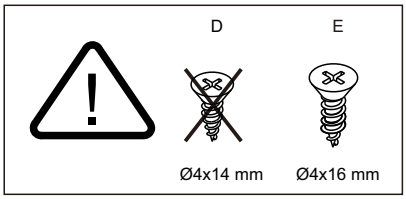

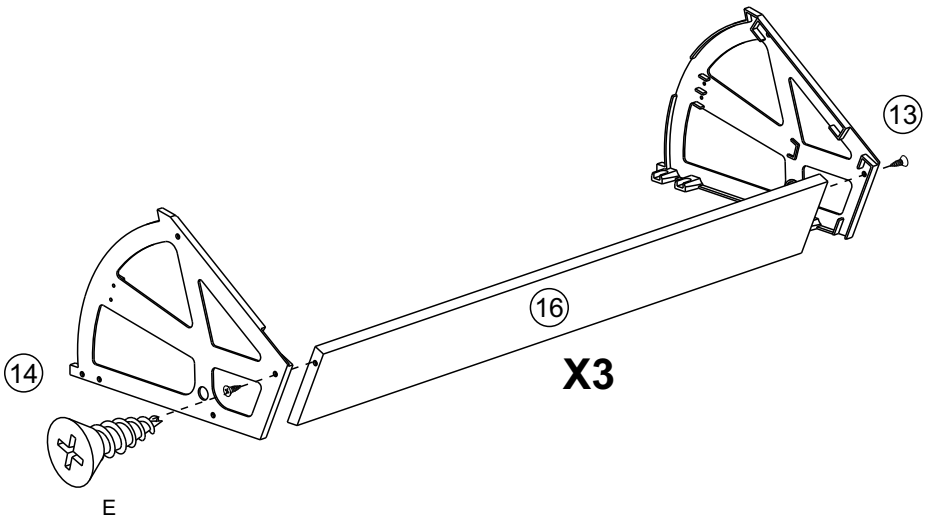

17

E x18



Ø4x16 mm

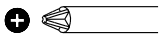

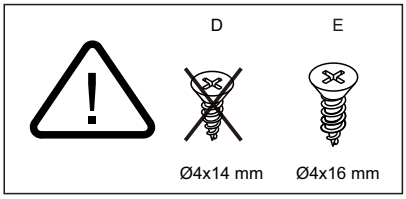

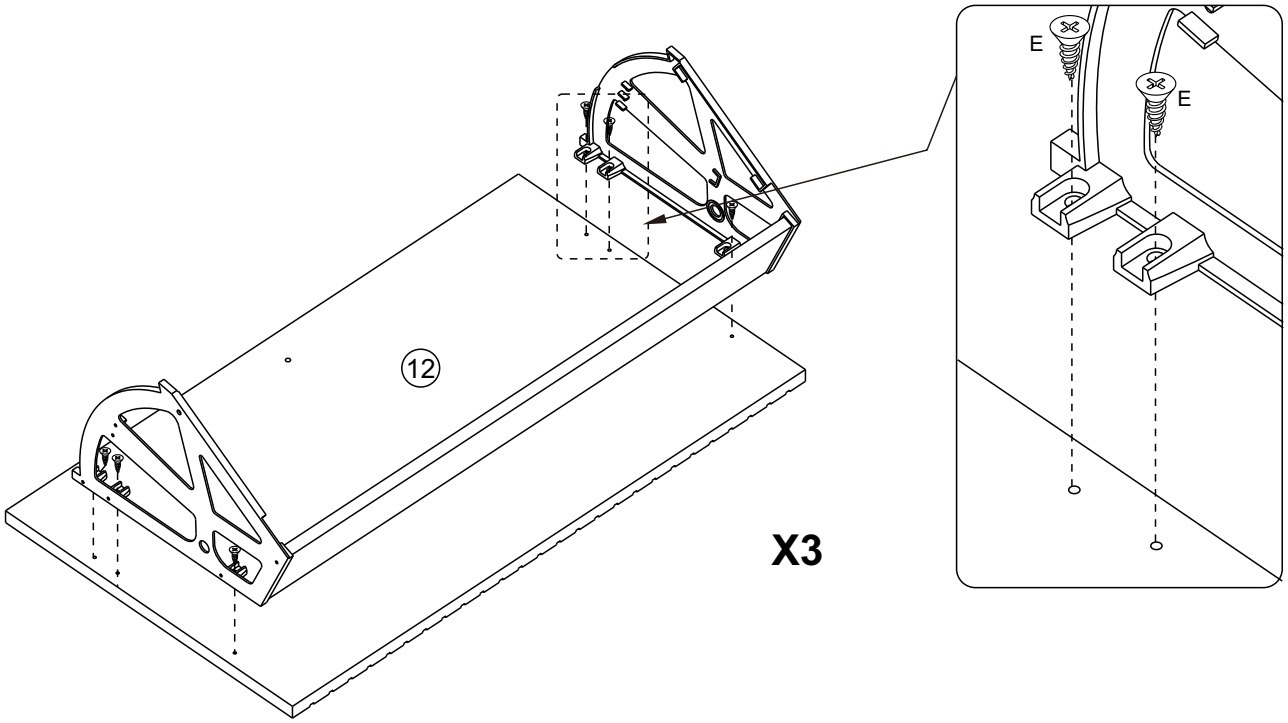

18

E x 6



Ø4x16 mm

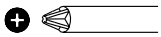

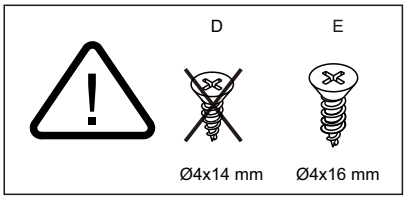

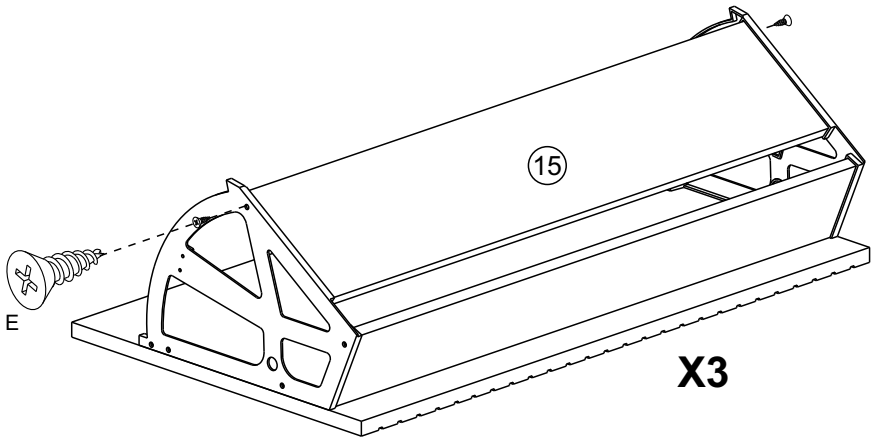

19

K x 3



Ø4x20 mm

N x 3



Ø17x22 mm

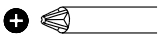

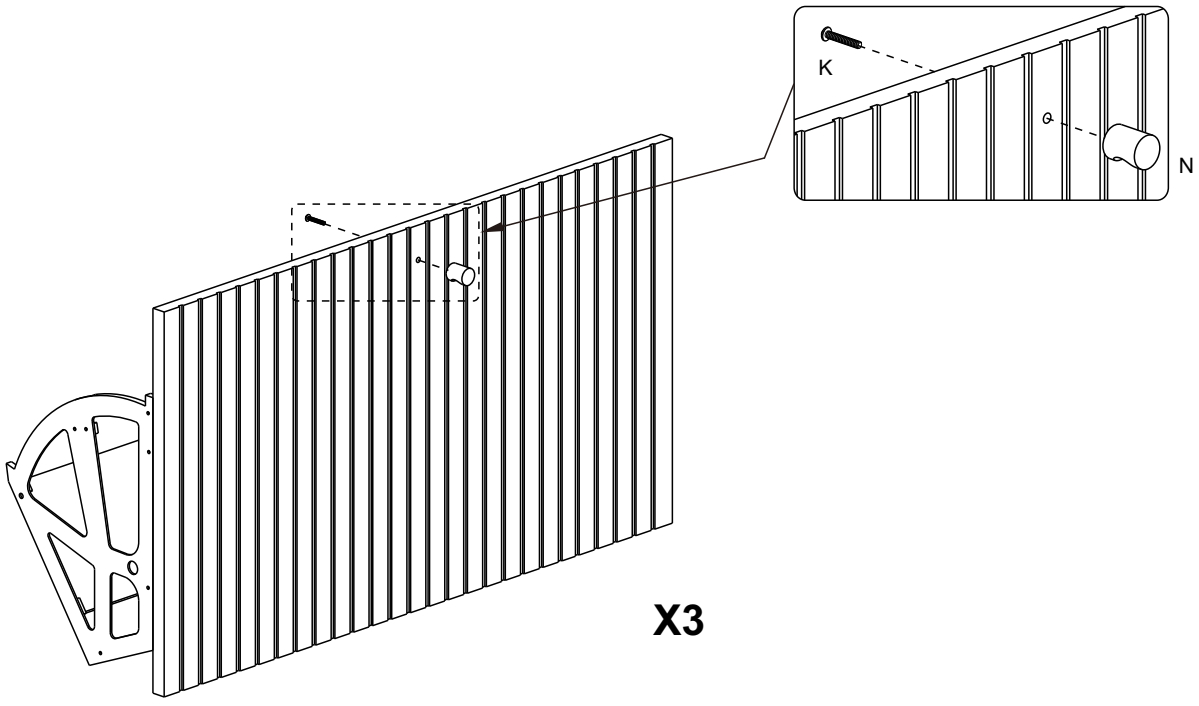

20

C x 6	D x 6
Ø17x12 mm	Ø4x14 mm

D Ø4x14 mm

E Ø4x16 mm

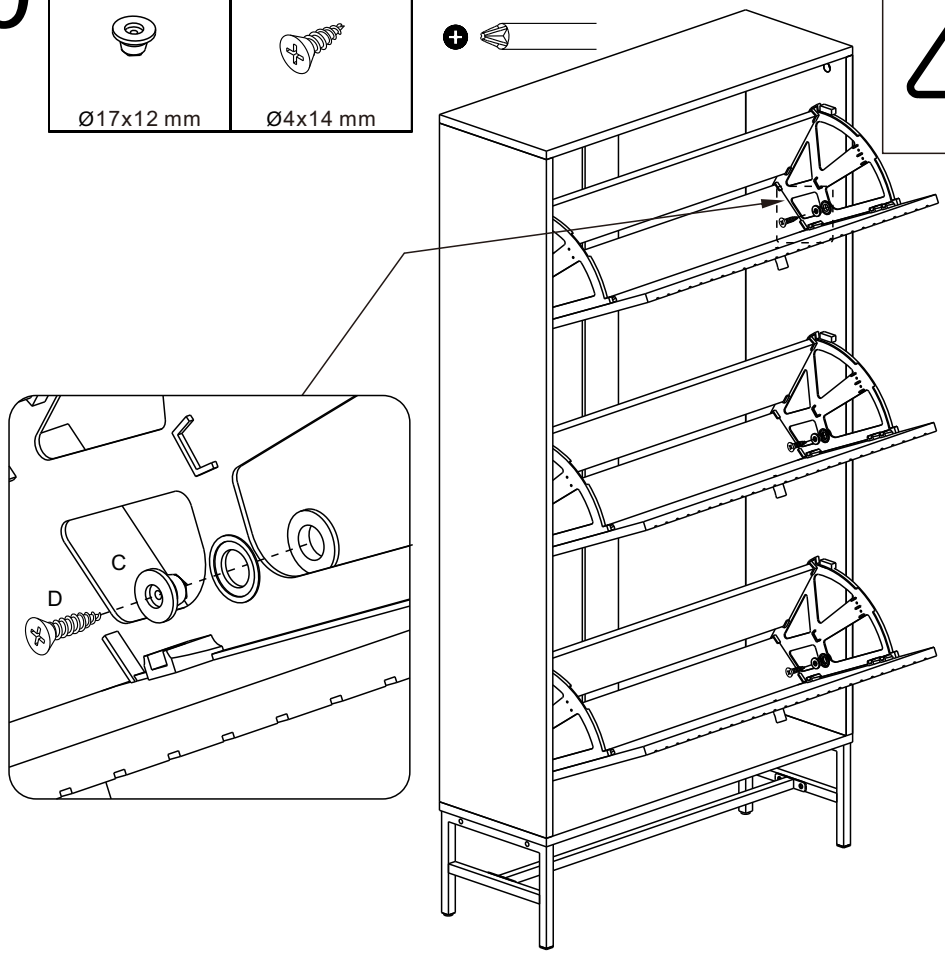

21

E x 6
Ø4x16 mm

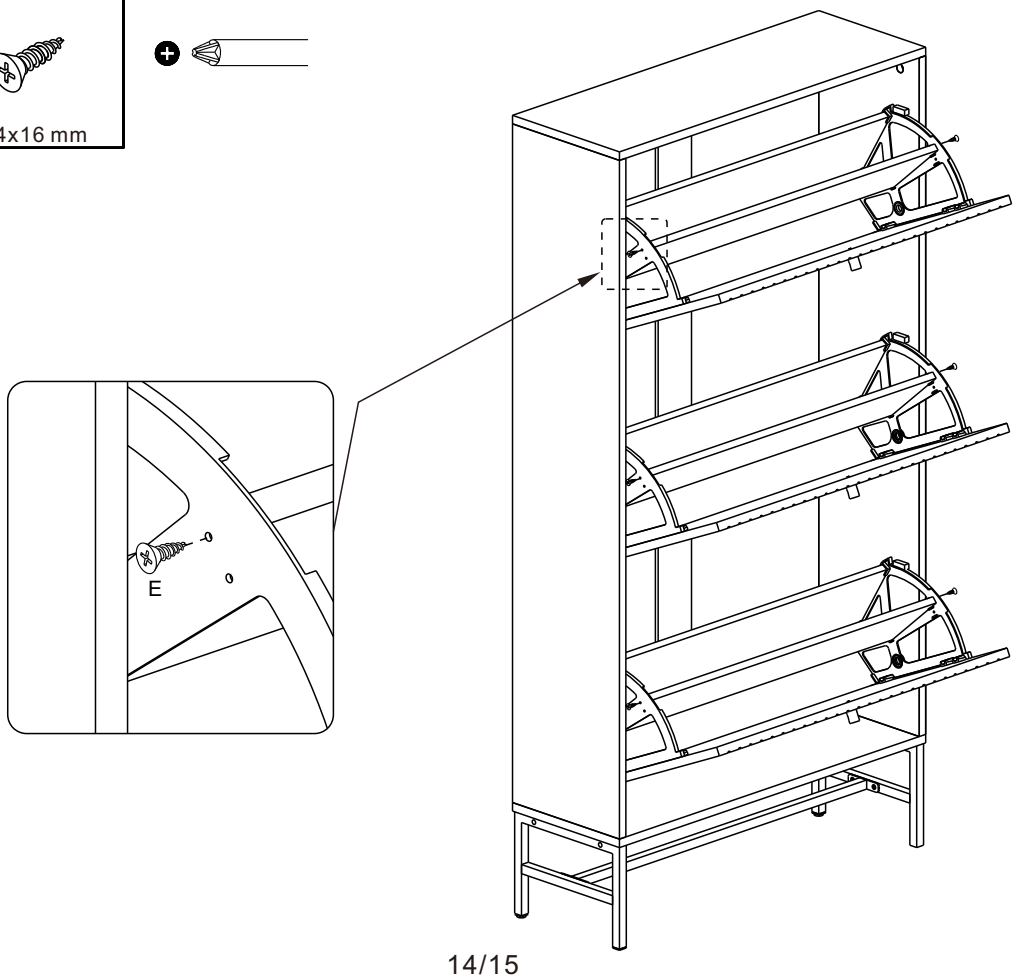

22

